Drawing No.
P 629A

© CROWN COPYRIGHT

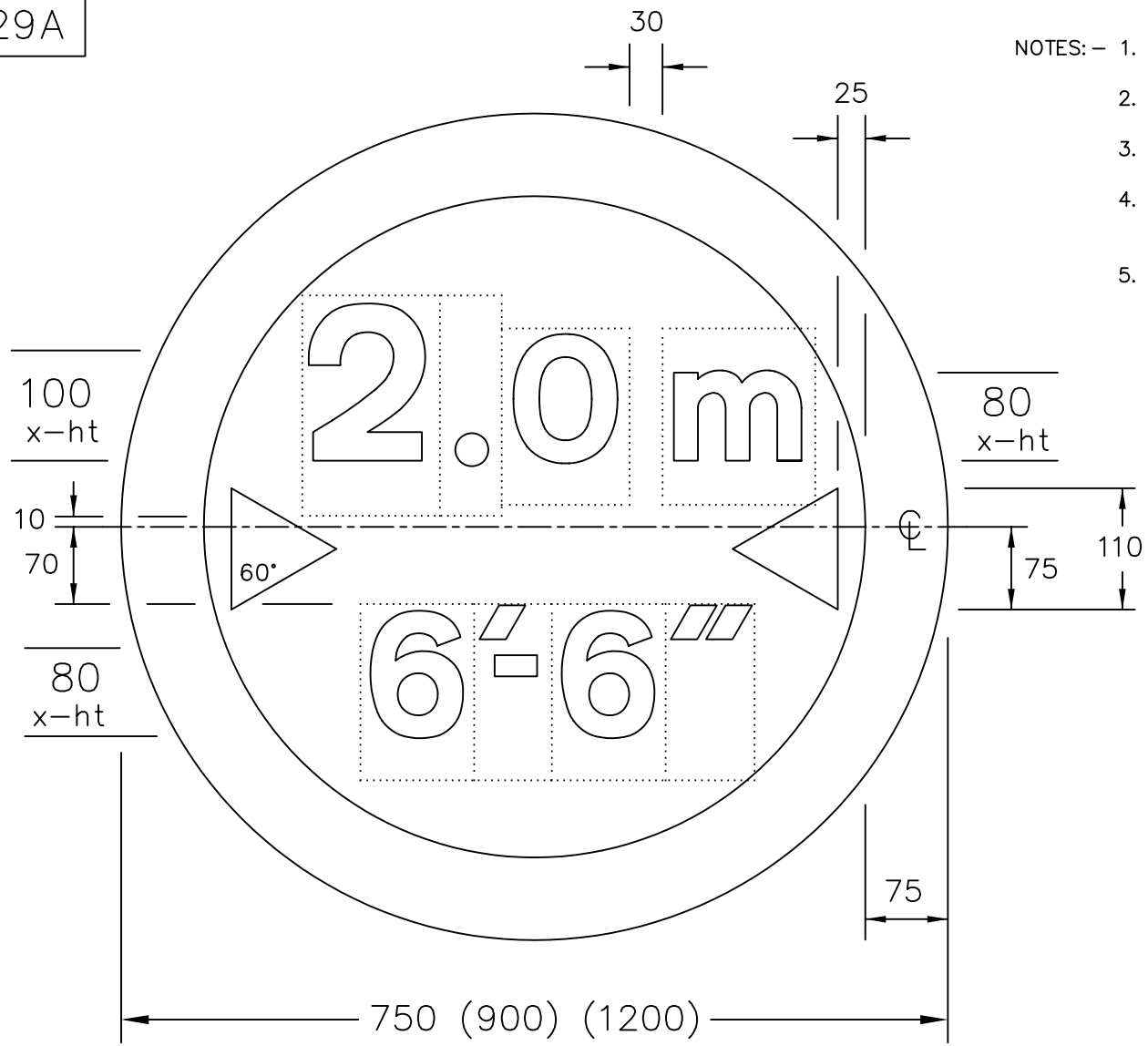

NOTES:–
1. The legend is from the Transport Heavy alphabet.
2. The tile outlines do not form part of the sign.
3. The width limit may be varied to suit the requirements.
4. All 750mm dia sign dimensions, including the x–height, shall be varied proportionally for the other roundel sizes.
5. COLOURS : Legend & Symbols --- BLACK
Background -------- WHITE
Border ---------- RED

P629A

Before using this drawing, confirm that it has not been superseded.

Department for Transport	Title: Regulatory Sign VEHICLE WIDTH LIMIT (Metric and Imperial)	Issue: A: B: C:	Date: 3.7.03	Drawn by: R.M. Approved by: R.M.	Dimensions: MILLIMETRES	Drawing No. P 629A