Drawing No.
P 1039
Sheet 1 of 2

Before using this drawing, confirm that it has not been superseded.

© CROWN COPYRIGHT

NOTES:
1. COLOUR : Arrow --- WHITE
2. The marking may be reversed in a mirror image to indicate a bifurcation to the right.
3. See sheet 2 for bifurcation arrows that are 8 metres and 16 metres long.

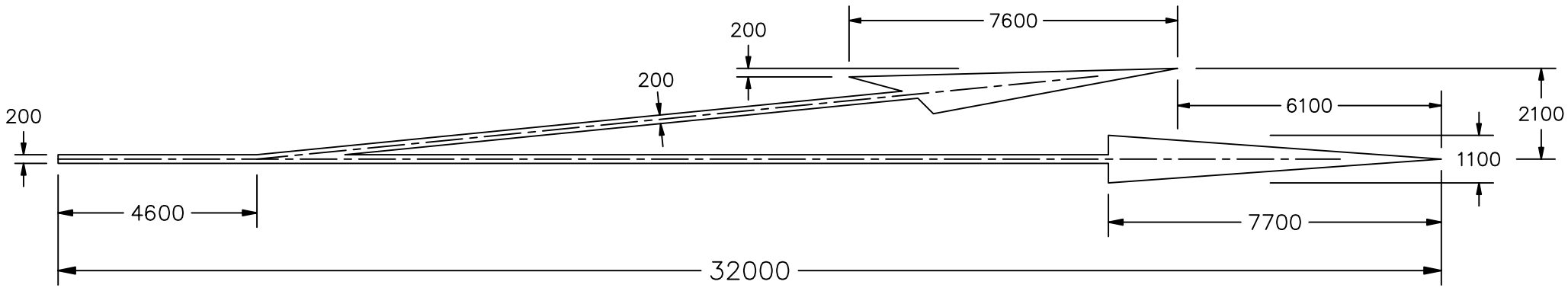

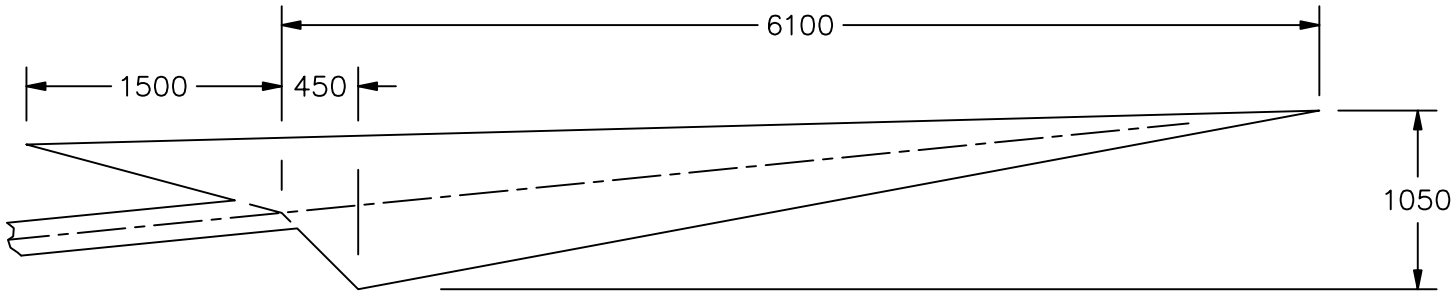

P1039–1

Department for Transport	Title: Road Marking BIFURCATION ARROW 32 metres long	Issue: A: B: C:	Date: 30.6.94 18.2.05	Drawn by: S.P. Approved by: R.M.	Dimensions: MILLIMETRES	Drawing No. P 1039 Sheet 1 of 2

Drawing No.
P 1039
Sheet 2 of 2

Before using this drawing, confirm that it has not been superseded.

© CROWN COPYRIGHT

NOTES: 1. COLOUR : Arrows --- WHITE

2. The markings may be reversed in a mirror image to indicate a bifurcation to the right.

3. See sheet 1 for a bifurcation arrow that is 32 metres long.

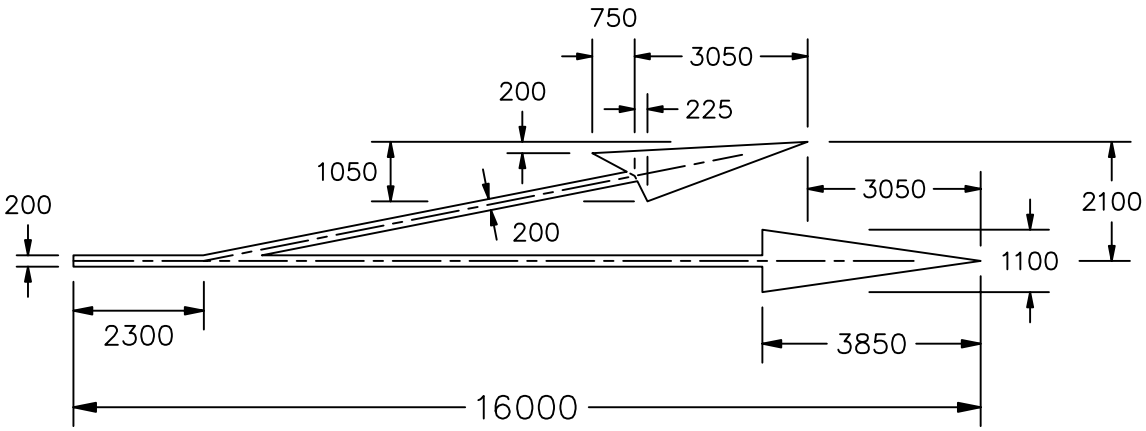

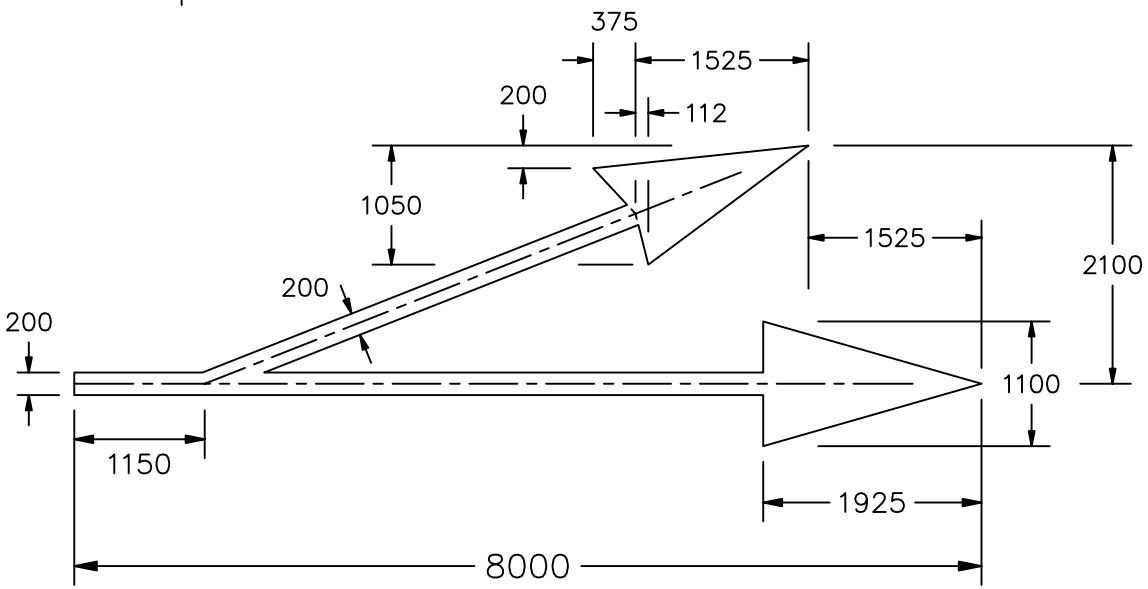

P1039–2

Department for Transport	Title: Road Markings BIFURCATION ARROWS 8 metres & 16 metres long	Issue: A: B: C:	Date: 30.6.94 18.2.05	Drawn by: S.P. Approved by: R.M.	Dimensions: MILLIMETRES	Drawing No. P 1039 Sheet 2 of 2