Drawing No.
T 125

© CROWN COPYRIGHT

NOTES: 1. The grid does not form part of any sign to which the symbol is applied.

2. Dimensions are given in grid divisions (normally equal to 1/4 x–height).

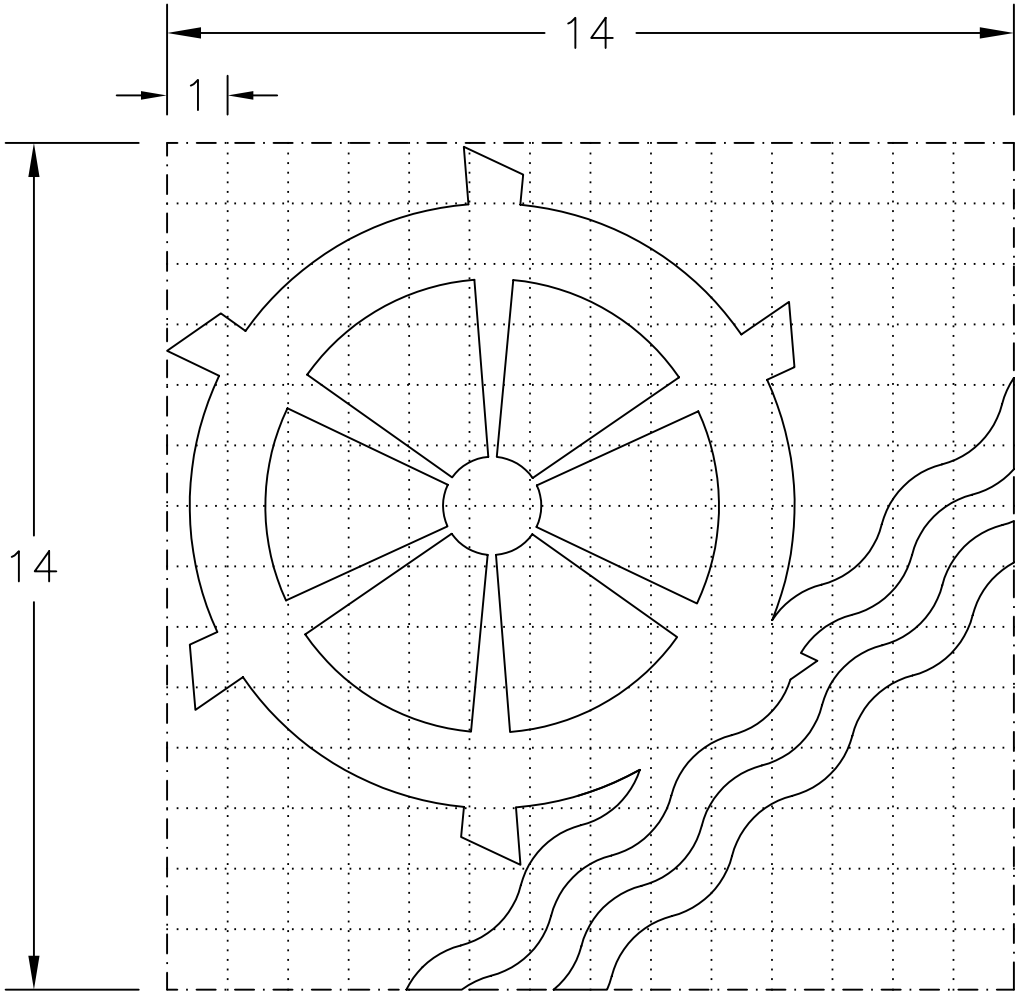

T125

Before using this drawing, confirm that it has not been superseded.

Department for Transport	Title: Tourist Attraction Symbol WATERMILL of historic or architectural interest	Issue: A: B: C:	Date: 1.7.94 8.1.04	Drawn by: S.P. Approved by: R.M.	Dimensions: SEE NOTE 2	Drawing No. T 125