Drawing No.	Related Drawings
P 553.1	P 500 & S 28

© CROWN COPYRIGHT

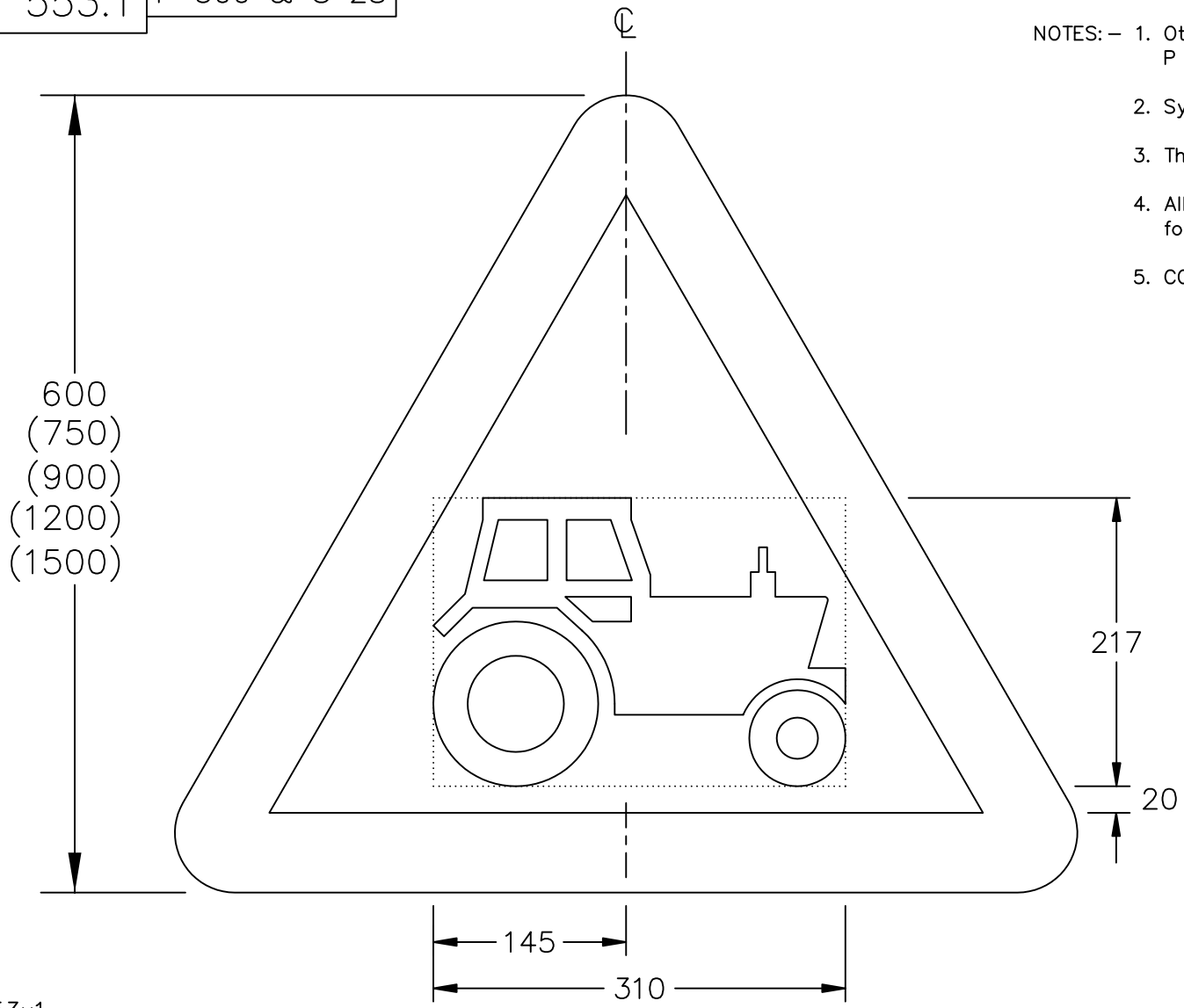

NOTES:–

1. Other dimensions for the triangle are shown on drawing P 500.
2. Symbol details are given on drawing S 28.
3. The tile outline does not form part of the sign.
4. All 600mm sign dimensions shall be varied proportionally for the other triangle heights.
5. COLOURS : Border ------ RED
   Background --- WHITE
   Symbol ------ BLACK

P553x1

Before using this drawing, confirm that it has not been superseded.

Department for Transport	Title: Warning Sign AGRICULTURAL VEHICLES likely to be in road ahead	Issue: A: B: C:	Date: 27.6.94 29.6.04	Drawn by: S.P. Approved by: R.M.	Dimensions: MILLIMETRES	Drawing No. P 553.1